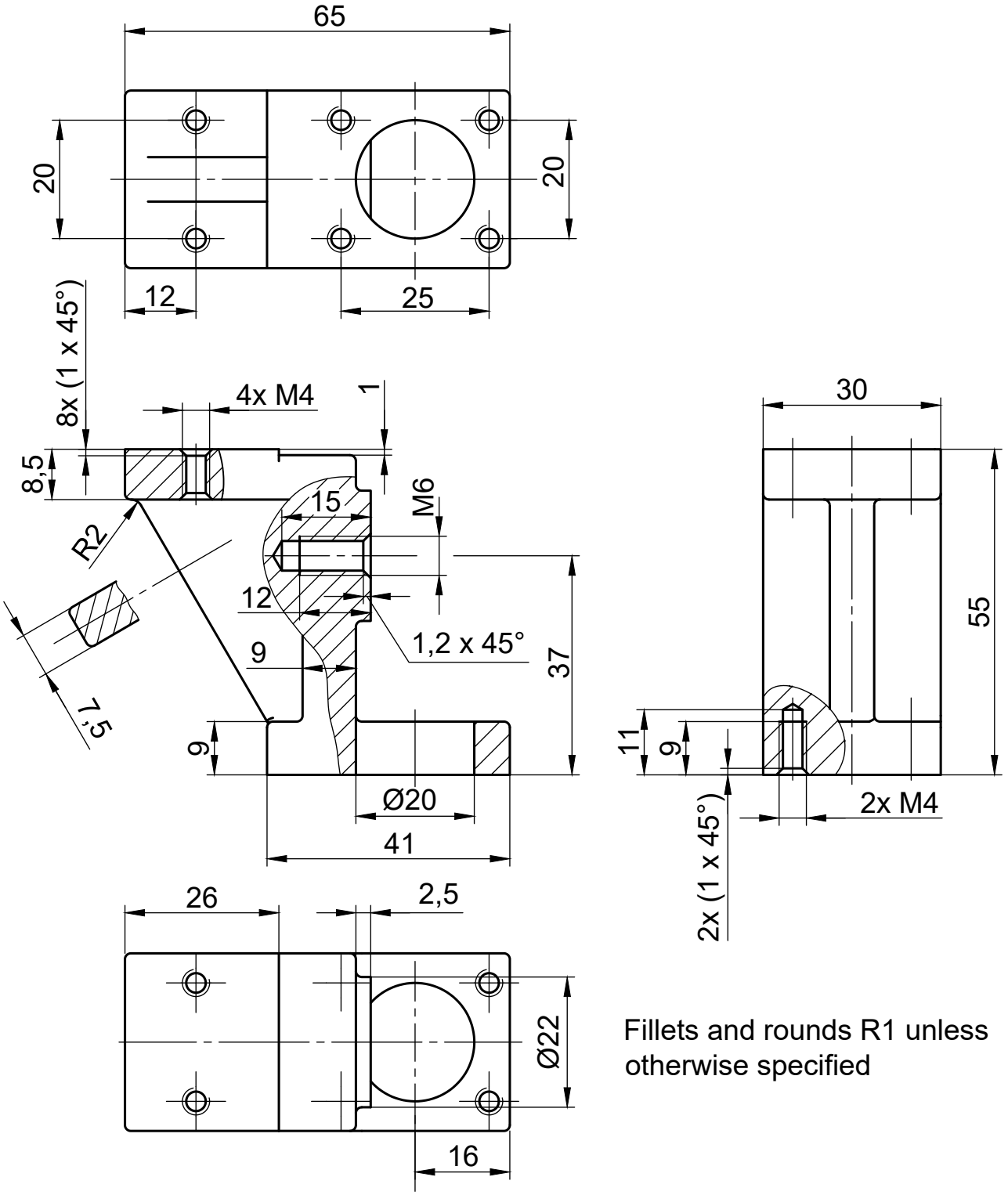

Fillets and rounds R1 unless otherwise specified

Drawing is prepared according to ISO standards adopted in Latvia and which are used for education purposes.
The standards used in industries and education of project partners countries might be different. Title Block presented here is used in Riga Technical University. Feel free to use your local Title Block!

					SPACAR 2020		
A4					STAND	Litera / Weight	Scale
Size	Sheet	Name	Signature	Date			1:1
Drawn				6.08.20		Sheet 1 of 1	
Checked							
					Al-Si7Mg EN 1706	RTU DIGK	